Halton SLN – Linear slot diffuser

Overview

- Horizontal or vertical plane jet air supply
- Special profile diffuser blade creates a Coanda effect which enables wide range or air flow rates
- Supply in one or two directions
- Ceiling or wall installation, suitable also for continuous “wall to wall” installations
- Adjustable throw pattern, flexibility of orientation with different configurations
- Detachable diffuser allows cleaning of the terminal unit and ductwork

Accessories

- Plenum with a circular duct connection(s) D160...250mm with rubber gasket
- Plenum options with measurement and adjustment functions
- Attenuation insulation for plenum

Dimensions

Halton SLN

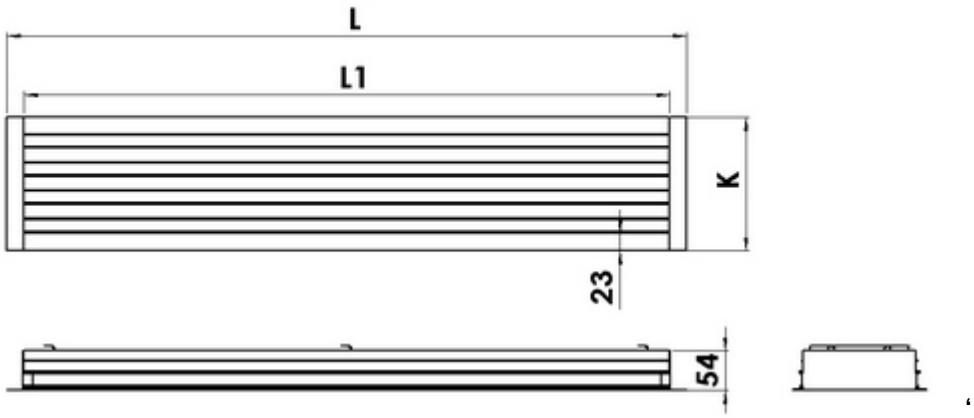

Halton SLN + PLD

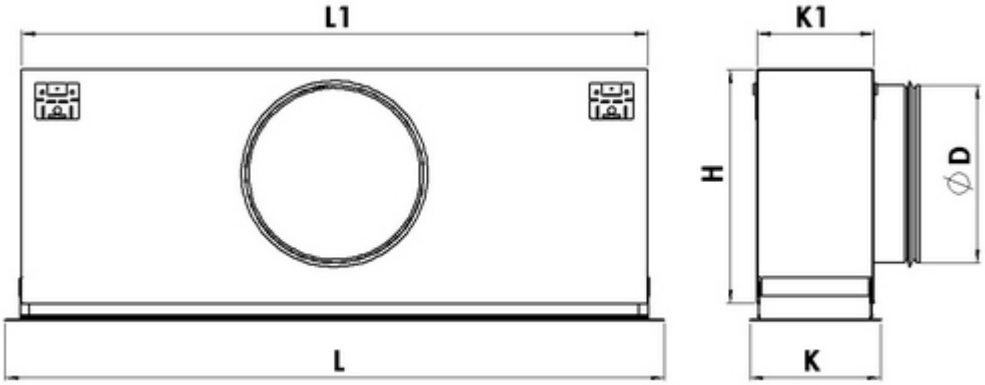

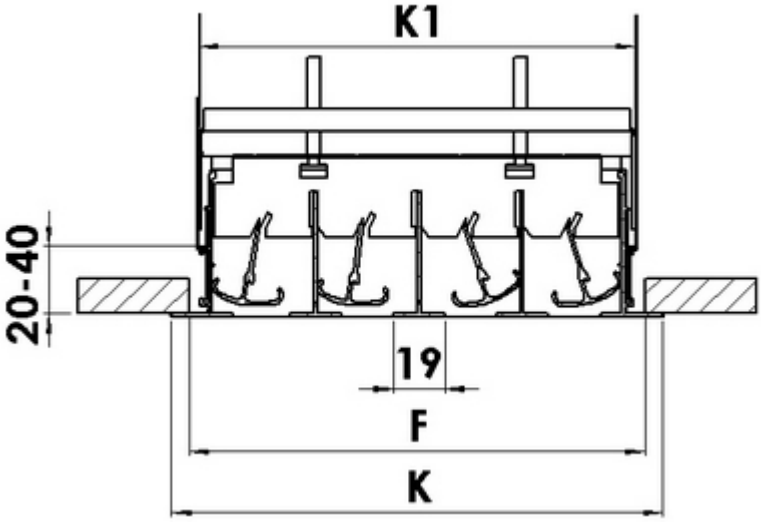

Standard dimensions of the Halton SLN + PLD unit with standard end caps are presented in the table below.

Active length	Slots	F	L	L1	H	H1	K	K1	K2	ØD
572	2	92	618	572	295..315	240	105	85	155	1×200
872	2	92	918	872	295..315	240	105	85	155	1×200
1172	2	92	1218	1172	295..315	240	105	85	155	1×200
1472	2	92	1518	1472	295..315	240	105	85	155	2×200
1772	2	92	1818	1772	295..315	240	105	85	155	2×200
572	3	130	618	572	295..315	240	143	123	193	1×200
872	3	130	918	872	295..315	240	143	123	193	1×200
1172	3	130	1218	1172	295..315	240	143	123	193	1×200
1472	3	130	1518	1472	295..315	240	143	123	193	2×200
1772	3	130	1818	1772	295..315	240	143	123	193	2×200
572	4	168	618	572	345..365	290	181	161	231	1×250
872	4	168	918	872	345..365	290	181	161	231	1×250
1172	4	168	1218	1172	345..365	290	181	161	231	1×250
1472	4	168	1518	1472	345..365	290	181	161	231	2×250
1772	4	168	1818	1772	345..365	290	181	161	231	2×250

Needed hole in the ceiling: F x (L1+10)

Material

Part	Material	Finishing	Note
Outer frame	Aluminium	Epoxy-painted: White (RAL 9003 / 30 %)	Special colours available. Epoxy/polyester painted as option.
End caps / T profiles	Aluminium	Epoxy-painted: White (RAL 9003 / 30 %)	Special colours available. Epoxy/polyester painted as option.
Flow deflection vanes	Aluminium	Epoxy-painted: White (RAL 9003/30 %)	Special colours available. Epoxy/polyester painted as option.
Plenum	Galvanised steel	–	–

Accessories

Accessory	Code	Description
Plenum	PLL	Plenum for duct connection (with or without attenuation material)
Plenum	PLD	Plenum for duct connection (without attenuation material)
End caps	N1	For modular ceiling, Width = 23 mm (2 pcs)
End caps	E1	For modular ceiling, Width = 12.5 mm (2 pcs)
Installation brackets	–	For installation of the diffuser with a PLL or PLD plenum
Staff brackets	–	For installation of the diffuser without plenum

Special end caps are available for modular ceilings.

Function

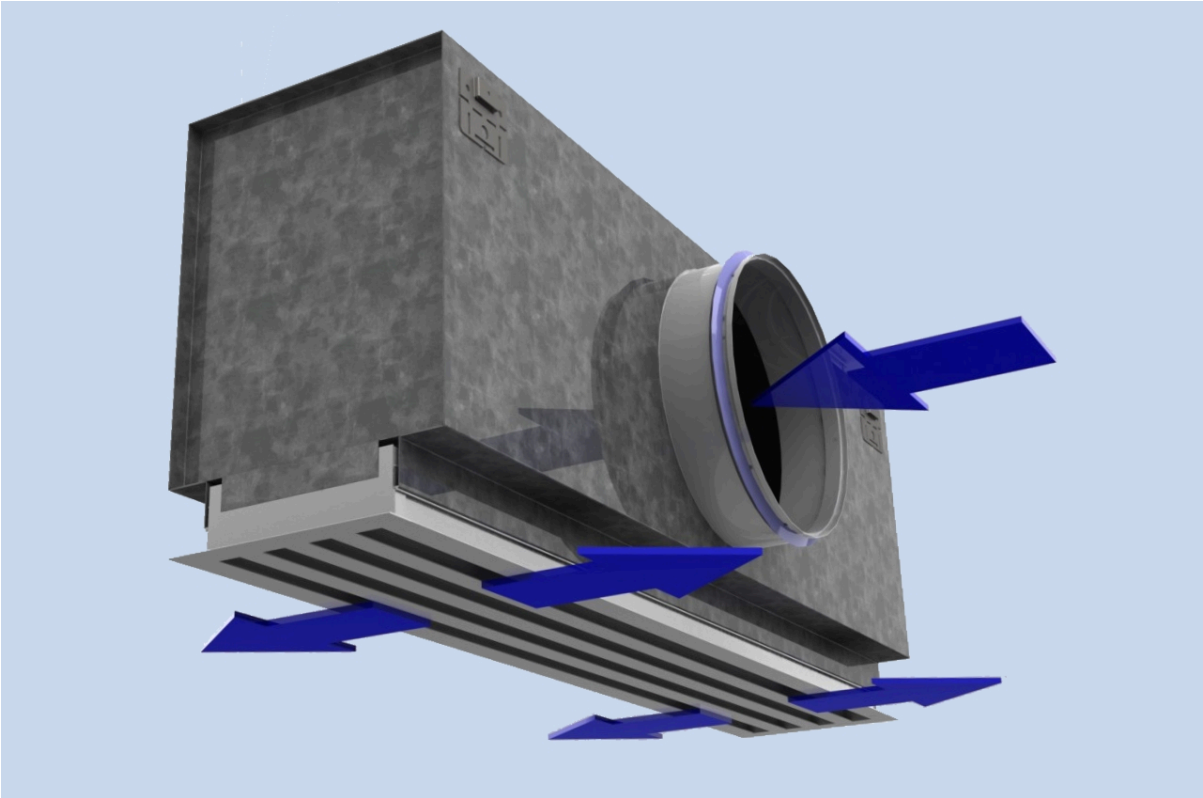

Supply air is supplied through the linear slots of the diffuser, either horizontally along the ceiling surface or vertically into the occupied zone.
For wall installation, the plane jet air is supplied horizontally or directed to the ceiling surface, which increases the throw length.

Installation

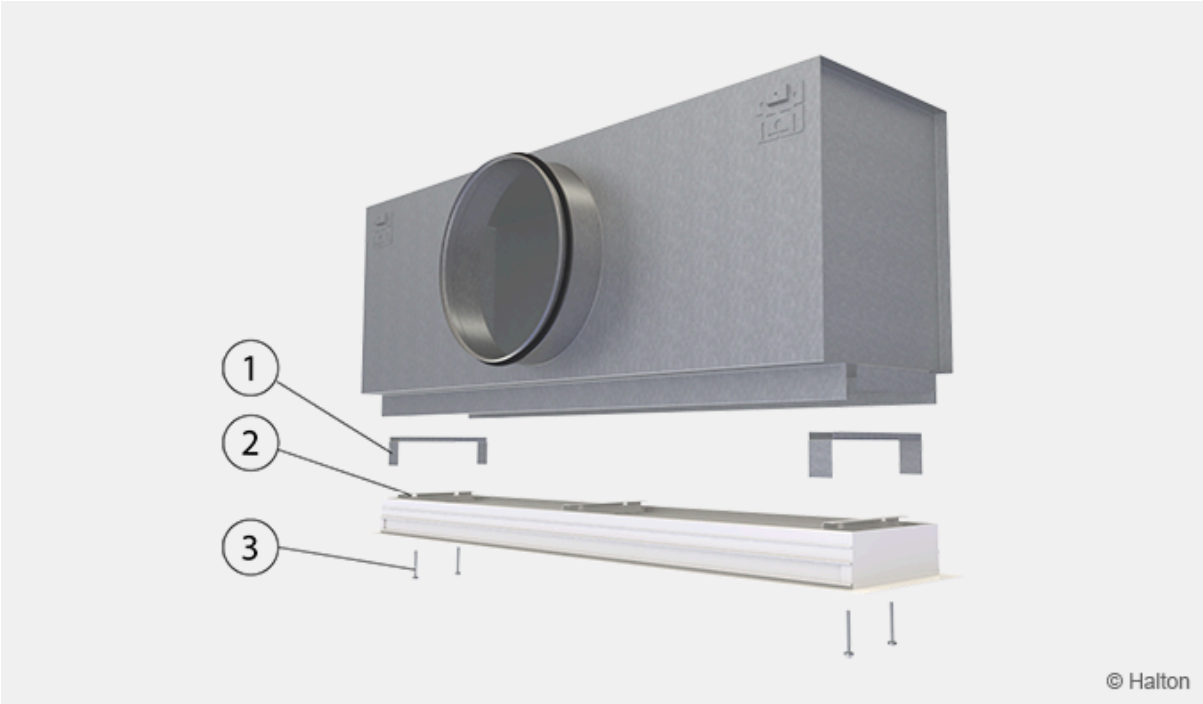

Code description:

1. Mounting bracket
2. Transversal bar
3. Screw

The Halton SLN linear slot diffuser is connected directly to the Halton PLL or PLD plenum.
The plenum is installed into the suspended ceiling with M8 drop rods (not included in the delivery) and connected to the ductwork.

Remove the T-profiles of the Halton SLN by pulling them gently, in order to access the transversal bars located behind the profiles.
Fit the installation brackets into the grooves of the plenum and secure with the screws supplied with the unit.
Put screws into the holes of the transversal bars. Screw on until the diffuser is flush to the ceiling.
Replace the T-profiles.

The unit can be installed without plenum using the staff brackets. Those pieces are available as accessory (2 by slad or by linear meter).

String course mounting

The maximum length is 2000mm. So when length is superior to 2000mm, it is necessary to place side by side several pieces. Some alignement guides are given in order to make the the mounting easier.

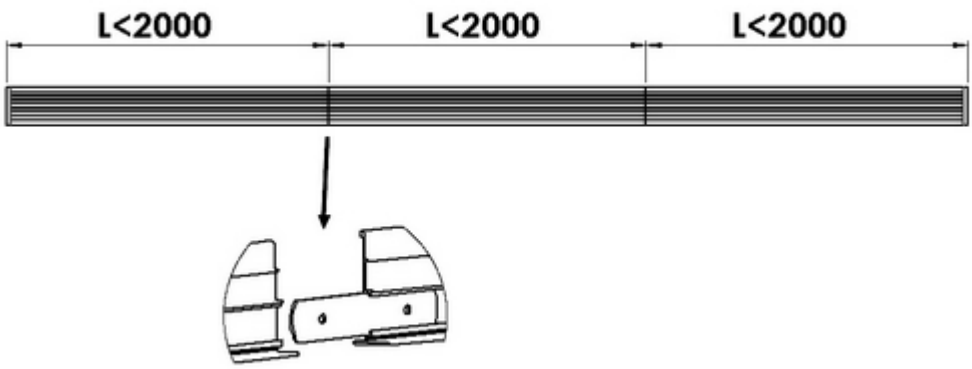

Adjustment

The air pattern can be changed through 180° by manually adjusting the flow deflection vanes. Each deflection vane section can be individually adjusted without removing the T-profiles, to provide flexibility in supply air pattern orientation.

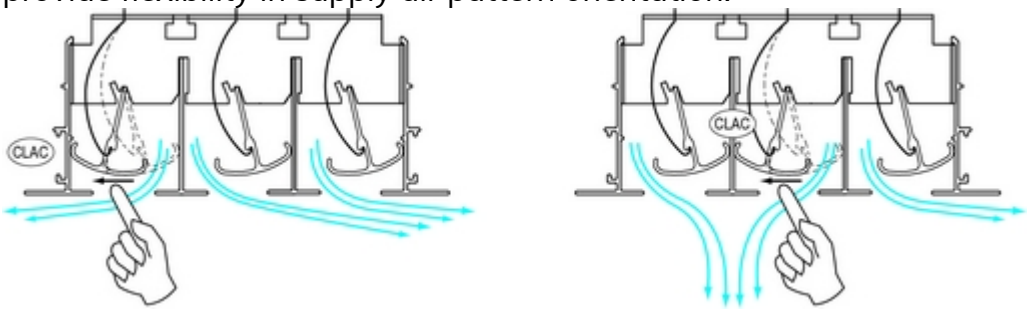

To aid in adjusting and measuring the airflow rate, it is recommended that the diffuser is connected to a plenum equipped with a MSM.
The supply airflow is determined by measuring the pressure difference with a measurement module.
Measure the differential pressure with a manometer. The airflow rate is calculated according to the following formula:

$$q_v = k * \sqrt{\Delta p_m}$$

where:

ΩPm Measured pressure (Pa)
k Factor given as a function of mounting and diameter
Qv Airflow rate (l/s)

The k factor for installations with different safety distances
(distance of other items from the MSM):

	Safety distance	
NS	> 6xD	min 3xD
160	19	22
200	28	32
250	49	51

Adjust the airflow rate by rotating the control spindle until the desired setting is achieved.
Lock the damper in position with a screw.
Replace the tubes and spindle in the plenum, and return the linear diffuser to its position.

Servicing

Remove the T-profiles.
Remove the linear diffuser by unscrewing the screws of the transversal bars.
Clean the parts by wiping with a damp cloth.
Push the linear diffuser back into place by screwing the transversal bars to the installation brackets.

Option: with balancing plenum Halton PLD + MSM (or PLL + MSM)

Remove the measurement and adjustment module by gently pulling the shaft (not the control spindle or measurement tubes!).
Wipe the parts with a damp cloth, instead of immersing in water.
Reassemble the measurement and adjustment module by pushing the shaft into place until the module meets the stopper.
Push the linear diffuser back into place by screwing the transversal bars to the installation brackets.

Specification

Halton-brand ceiling diffuser, type Halton SLN, with two to four slots, suitable for variable airflow.

Excellent coanda effect provided with a wide range of airflow rates.

The supply air pattern shall be directable by adjusting the flow deflection vanes without any change in the appearance of the diffuser.

The linear slot diffuser shall have an extruded aluminium outer frame, flow deflection vanes and T-profiles, and polyester-painted to white (RAL 9003) colour.

The diffuser shall be connected to the ductwork using a plenum with mineral wool as sound attenuation material.
The removable linear slot diffuser shall be mounted into the plenum with invisible screws.

The plenum shall comprise an airflow measurement and adjustment module.
The linear diffuser shall be removable in order to provide access to the measurement and adjustment module in the plenum.

Flow deflection vanes and T-profiles shall be easily removable for access to the plenum.

Order code

SLN/N-L; FP-SE-ST-FI-CO-ID-ZT

N = Number of slots
2, 3, 4

L = Active length (mm)
400, +1, .., 50000

Other options and accessories

FP=Front plate option (available from Crépy factory)
N No
TC TC Ceiling
FC Fineline Ceiling

SE = End caps
Y Yes
N No

ST = Type of end caps
NA Not assigned
N1 Standard 23 mm
E1 Type E1

FI = Finishing
PN Painted

CO = Colour

SW Signal white (RAL 9003)
X Special colour (RAL xxxx)

ID = Diffuser assembled with plenum (available from Crépy factory)
N No
Y Yes

ZT = Tailored product
N No
Y Yes (ETO)

Sub products

PLD Plenum

Code example

SLN-2-400, SE=Y, ST=N1, FI=PN, CO=SW, ZT=N